HISAKAGE®

Ice Maker

JM Series Self-Contained Ice Maker

Model：□ JM-120



JM-120

Product Features

1) Flowing double-sided ice making. Evaporation temperature -20℃,ice center temperature -13℃.

2) Solid ice ,hard and not easy melt,high transparency.

3) It can still work normally at peak air 43℃.

4) Incorporate R290 refrigerant ,which is more efficient and environmentally friendly, lower global warming.

5) Intelligent controller,auto ice making , ice release and cleaning , trouble alarm.

6) Adopt SS304 and ABS for ice machine. Ice bin designed with interior rounded corners for easy cleaning with PE injection molding process makes smooth and beautiful surface , strong and durable.

7) Easy cleaning , Pour the cleaning liquid into the water trough. The cleaning process takes about 35 minutes.

8) Easy for repair and service. Removable air filter,water-trough,distribution tube for fast and efficient cleaning,lower labor cost.

9) The main components (First well-known international brands). Unique evaporator design with more efficient and energy-saving.

10) Suitable for beverage making, beverage stores, coffee bar,juice bars etc. quickly cooling drinks.

Electric Specification

·Rated Voltage：220V / 50Hz

·Rated Current：1.5A

·Rated Power：320W

·Fuse Rating：10A

Operating Specification

·BTU Per Hour：1800(Average)/2300(Peak)

·Ambient Temperature Range：1.7℃-43.3℃

·Water Temperature Range：3.2℃-32.2℃

·Potable Water Pressure：138KPA-550KPA

·Refrigerant： R290

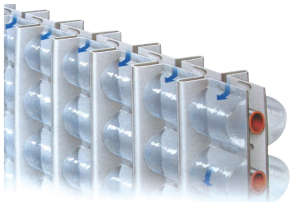



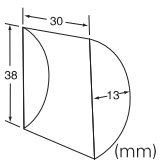

JM：Crescent
Weight：10g
Water content：2%
Dimension：30*13*38mm

www.hisakage.com

HISAKAGE®

Ice Maker

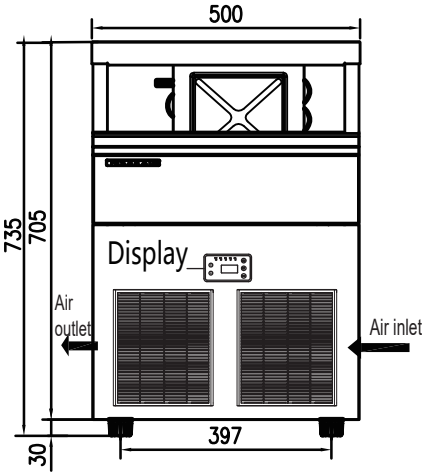

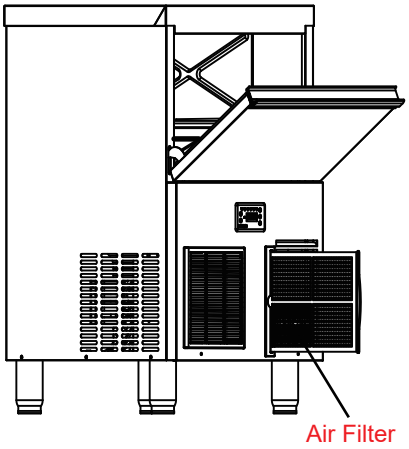

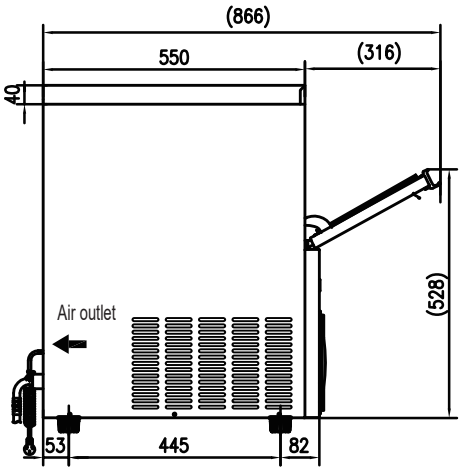

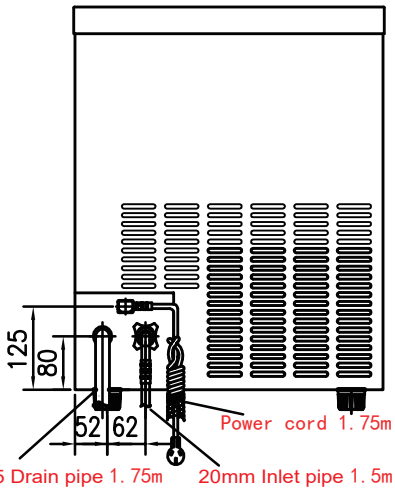



Width	500mm
Depth	580mm
Height	705mm/735mm
Storage Bin	33lbs. 15kg.

785mmHeight excludes bin legs
815mmHeight includes bin legs

Specifications

	Model	Ice Type	Ice Prpduction 24 Hours (Air/Water)		Power Usage (KWh/100lbs)	Potable Water (Usage/100lbs)
			21°C Air/10°C Water	32°C Air/21°C Water		
Air Cooled	JM-120	Crescent	125 lbs.	105 lbs.	6.8	59L
			56 kg	48 kg		