HISAKAGE®

Refrigerator

C Series—201 Air Cooling Refrigerator

Model： ☐ SRCP-120 ☐ SFCP-120 ☐ CT-SCP-120



SRCP-120/SFCP-120/CT-SCP-120

Specification

- Model ：SRCP-120 / SFCP-120 / CT-SCP-120
- Capacity：1000L / 950L
- Temp：-6~15℃ / -22~-18℃ / 0~15— -22~-18℃
- Cooling Mode：Air cooling
- Refrigerant：R290
- Shelf Layer：6
- Insulation Material：Cyclopentane
- Sheet Metal：201SS
- Voltage：220V
- Power：480W / 720W / 800W
- Size：1200*(760+50)*(1900+100)

Product Features

1)Computer board intelligent control,fault diagnosis function.Temperature accurate to 0.1 degrees,temperature difference in the box does not exceed 2 degrees,

2)Stainless steel door handle,beautiful, strong, durable, can be better matched with customers products.

3)The foam layer thickness of the box is ≥60,the foam thickness of the door panel is ≧55, the door panel is flush with the ventilation window, the door automatic return to ensure food safety when the angle is ≧45°

4)Environmentally friendly refrigerant R290,avoid air pollution, cyclopentane fluorine-free environmental protection, 60mm thick high-density foam insulation layer, better insulation performance.

5)The heating wire is hidden in the door frame to avoid condensation, the circular arc design in the box is helpful for daily maintenance, and no dead corners are left

6)Adapt to the high temperature 43°C environment design, can meet most customer needs



Brand Compressor

R290 refeigerant,efficient, energy saving,better cooling ettect.



Intellectual Temperature Control

Precise temperature control automatic detection&alarm



Web：www.hisakage.com

HISAKAGE REFRIGERATION SYSTEM

HISAKAGE®

Refrigerator

C Series—201 Air Cooling Refrigerator

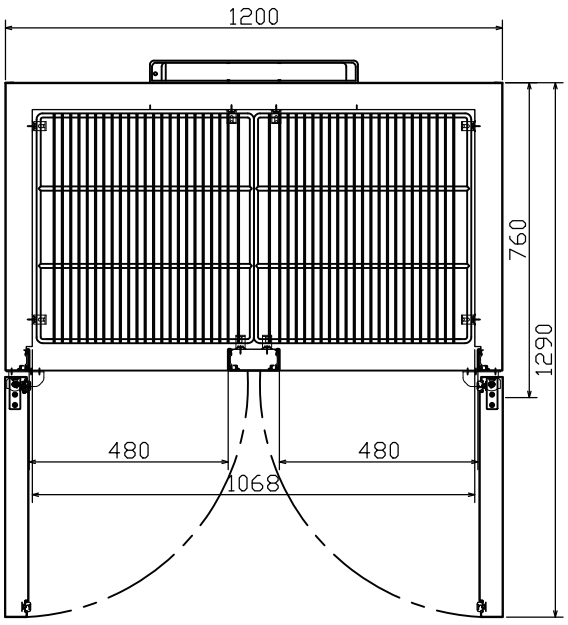

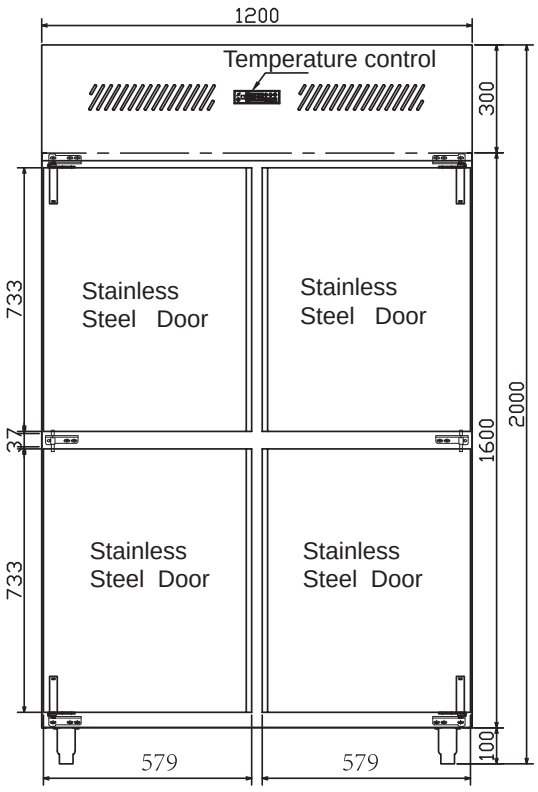



Width	1200mm
Depth	760+50mm
Height	2000mm

1900mm Height excludes legs

2000mm Height includes legs

Specifications

	Model	Function	Capacity	Temp	Cooling Type	Refrigerant	Shelf	Power	Size
Air Cooled	SRCP-120	R	1000	-6~15	A	R290	6	480W	1200x (760+50) x (1900+100)
	SFCP-120	F	1000	-22~-18	A	R290	6	720W	1200x (760+50) x (1900+100)
	CT-SCP-120	R/F	950	-0~15 /-22~-18	A	R290	6	800W	1200x (760+50) x (1900+100)

Web：www.hisakage.com

HISAKAGE
REFRIGERATION SYSTEM