HISAKAGE®

Refrigerator

CD Series— Deep Freezer

Model： ☐ **CD-140**



CD-140

Specification

- Model ：CD-140
- Capacity：450L
- Temp：-45~-65℃
- Cooling Mode：Direct cooling
- Refrigerant：R290
- Shelf Layer：/
- Insulation Material：Cyclopentane
- Sheet Metal：/
- Voltage：220V
- Power：450W
- Size：1405*750*(805+50)

Product Features

1)Computer board intelligent control,fault diagnosis function.Temperature accurate to 0.1 degrees,temperature difference in the box does not exceed 2 degrees,

2)Stainless steel door handle,beautiful, strong, durable, can be better matched with customers products.

3)The foam layer thickness of the box is ≥60,the foam thickness of the door panel is ≧55, the door panel is flush with the ventilation window, the door automatic return to ensure food safety when the angle is ≧45°

4)Environmentally friendly refrigerant R290,avoid air pollution, cyclopentane fluorine-free environmental protection, 60mm thick high-density foam insulation layer, better insulation performance.

5)The heating wire is hidden in the door frame to avoid condensation, the circular arc design in the box is helpful for daily maintenance, and no dead corners are left

6)Adapt to the high temperature 43°C environment design, can meet most customer needs



Brand Compressor

R290 refeigerant,efficient, energy saving,better cooling ettect.



Intellectual Temperature Control

Precise temperature control automatic detection&alarm



Web：www.hisakage.com

HISAKAGE REFRIGERATION SYSTEM

HISAKAGE®

Refrigerator

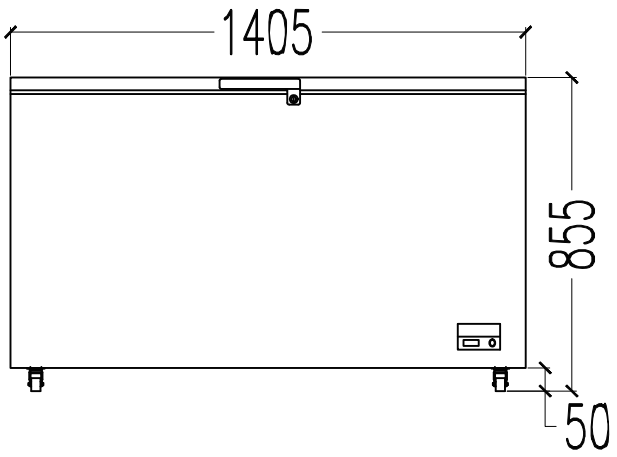

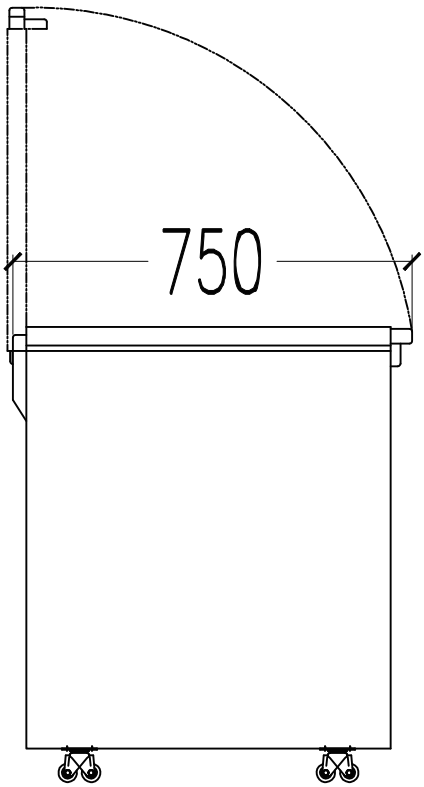

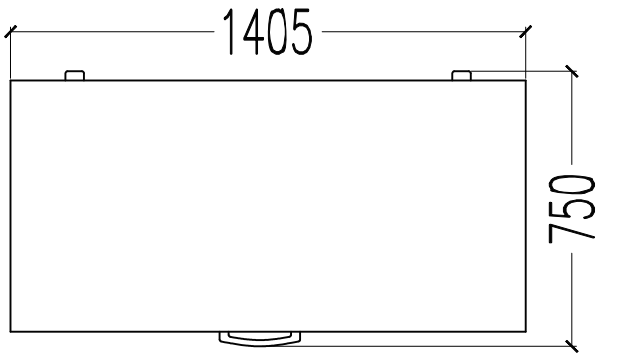



Width	1405mm
Depth	750mm
Height	805/855mm

805mm Height excludes legs

855mm Height includes 50mm legs

Specifications

	Model	Function	Capacity	Temp	Cooling Type	Refrigerant	Power	Size
Air Cooled	CD-140	F	450L	-45~-65	D	R290	450W	1405*750*(805+50)

Web：www.hisakage.com

HISAKAGE
REFRIGERATION SYSTEM